FCT-65D

Ortho Extender 2x System Chart

▼Standard Accessories

6S. Camera Angle Adjuster CCA-S [TKA21200N]

10. Coupling DT (SKY90) [TKP35001]

13. 50.8 Sleeve [TKP00113]

70. 50.8 Adapter(FCT-60D) [TKP11110]

60L. Ortho Extender 2x [TKA00830]

The following are the components of Ortho Extender:

61L. Ortho Extender 2x body

61-B. Vari tube (S) [TKA00587]

61-A. Vari Tube (L) [TKA00586]

62. M42-31.7 AD

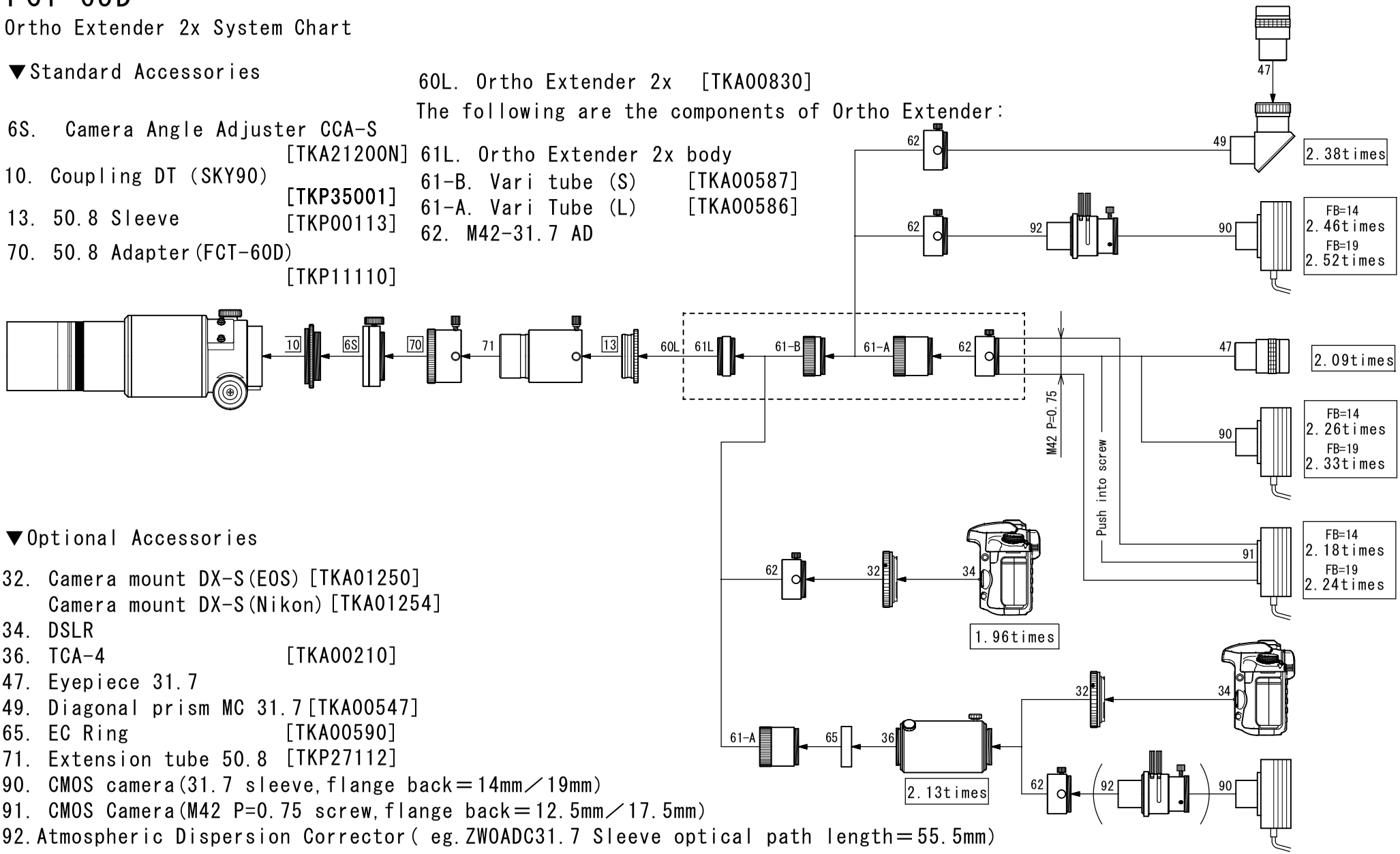

▼Optional Accessories

32. Camera mount DX-S(EOS) [TKA01250]
    Camera mount DX-S(Nikon) [TKA01254]
34. DSLR
36. TCA-4 [TKA00210]
47. Eyepiece 31.7
49. Diagonal prism MC 31.7 [TKA00547]
65. EC Ring [TKA00590]
71. Extension tube 50.8 [TKP27112]
90. CMOS camera(31.7 sleeve, flange back＝14mm／19mm)
91. CMOS Camera(M42 P=0.75 screw, flange back＝12.5mm／17.5mm)
92. Atmospheric Dispersion Corrector(eg. ZWOADC31.7 Sleeve optical path length＝55.5mm)

* ▭ *The numbers in brackets are the magnification ratios calculated using the formula in the Ortho Extender instruction manual.

TAKAHASHI